MEMBER LIST

MARK	DESCRIPTION	Q'TY	LENGTH	GRADE	REMARK
MC1	RHS150x100x6	2	4592	SS400	
MC2	RHS150x100x6	2	4592	SS400	
GR1	C15015	2	4939.4	SS400	
GR2	C15015	2	3242.5	SS400	
GR3	C15015	2	1545.5	SS400	
TR1	RHS150x100x6	2	3603	SS400	
TR2	RHS150x100x6	2	3603	SS400	
PR1	C15019	8	7000	SS400	

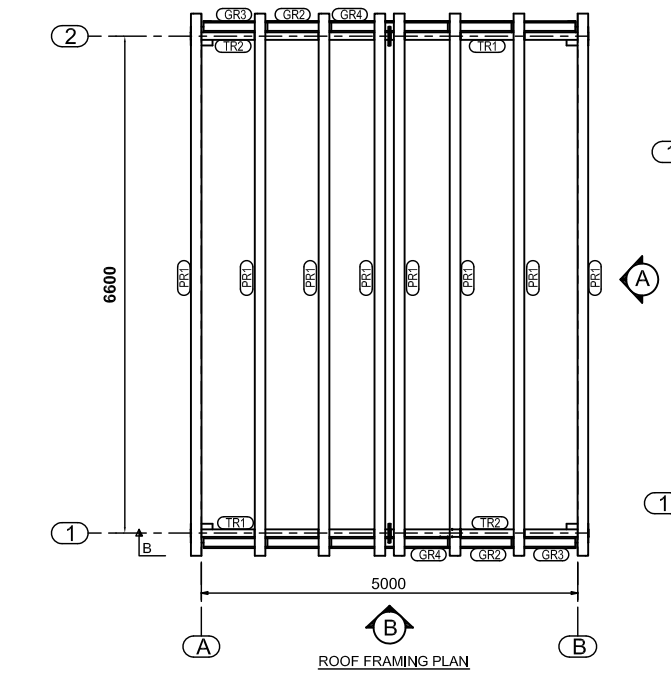

ROOF FRAMING PLAN

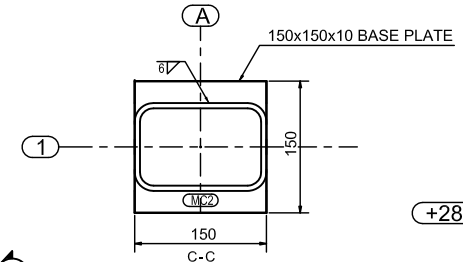

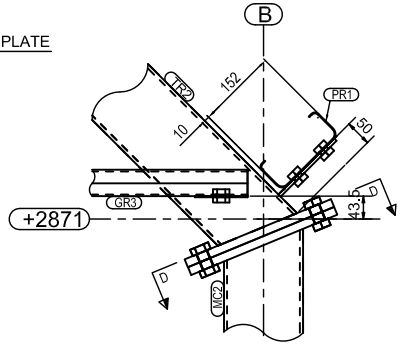

DETAIL - 'A'
1:5

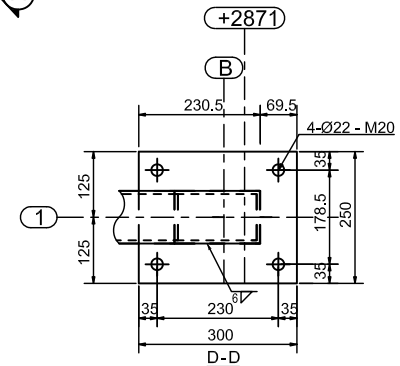

D-D
1:5

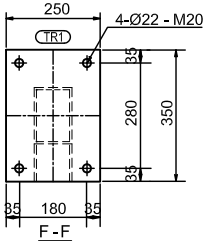

F-F
1:5

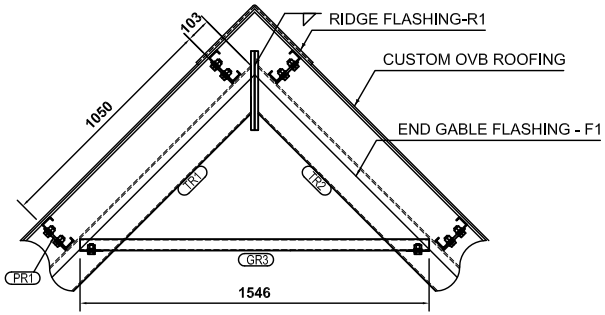

DETAIL - 'F'
1:3

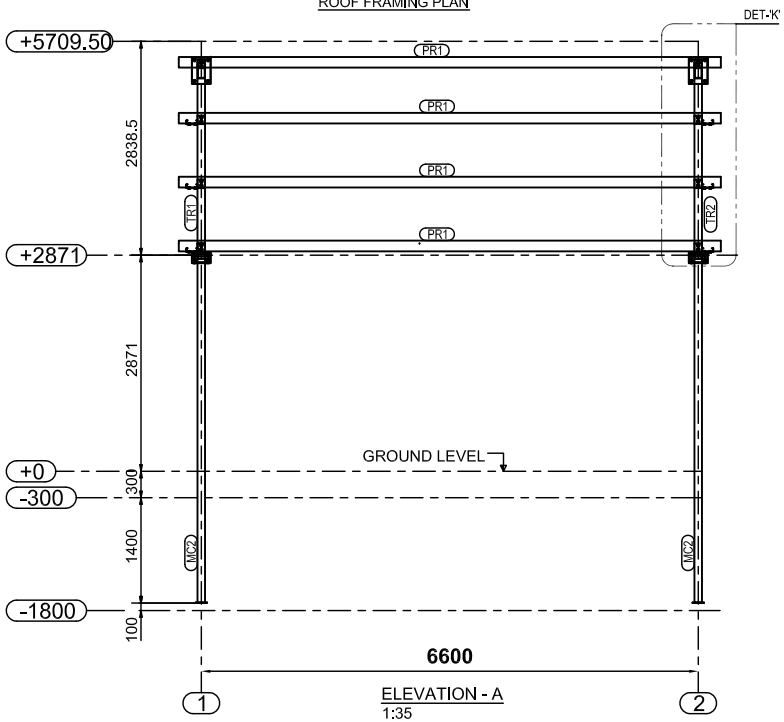

ELEVATION - A
1:35

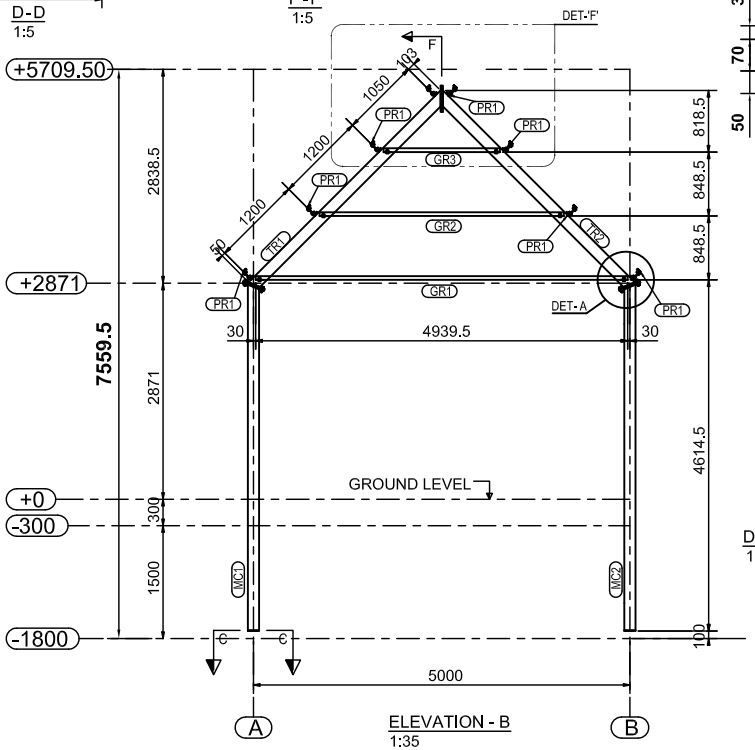

ELEVATION - B
1:35

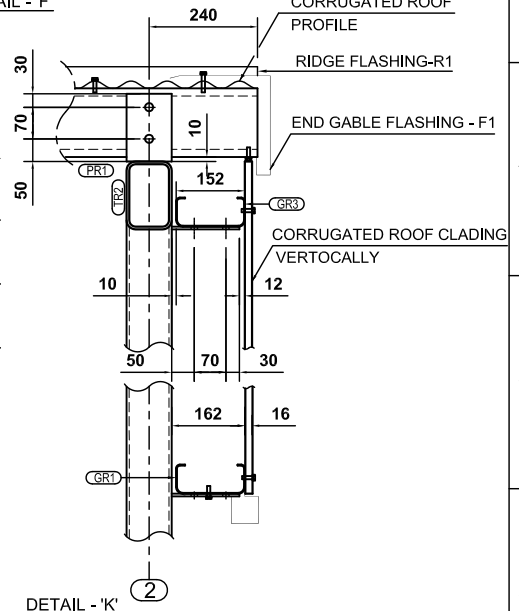

DETAIL - 'K'
1 : 6

NO.	REV.	DATE	DESCRIPTION
1	1	08-08-2017	ADDTIONAL OF DETAIL DRAWING
0			

CIVIL VIC CONSTRUCTION GROUP

PROJECT
BEECHWORTH PICNIC SHELTER

TITLE
ROOF FRAMING PLAN & DETAIL

SCALE 1:30 | DWG. NO. 417-17-1-2 | REV. 1