GRID LOCATION
BM3 A-B/1 EL +5.494

BILL OF MATERIAL

MARK	DESCRIPTION	Q'TY	LENGTH	WEIGHT	REMARK
	2 - BEAM - TR1				
B11	RHS150X100X6	2	3603	78.4	SS400
PL5	PL16X250	2	300.0	9.4	SS400
PL6	PL16X250	2	350.0	11.0	SS400
PL7	PL8X75	24	140	15.24	SS400
	FIELD BOLTS	Q'TY	LENGTH	GRADE	
	M 16 H.T.B	28	35	F10T	
	M 20 H.T.B	16	65	F10T	

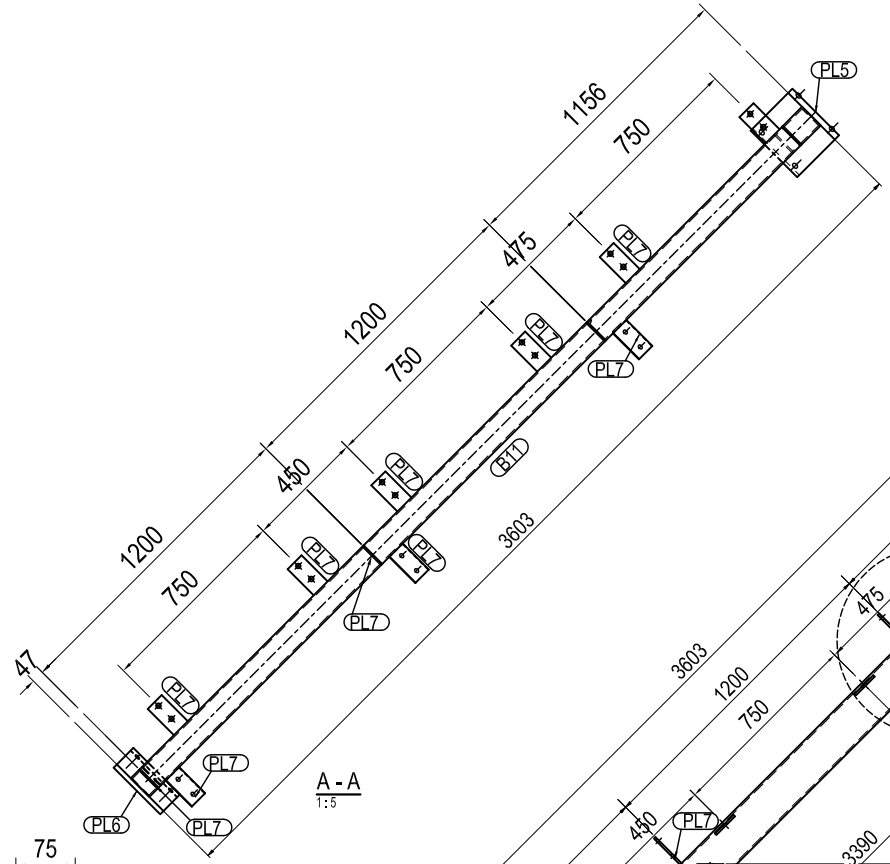

A - A
1 : 5

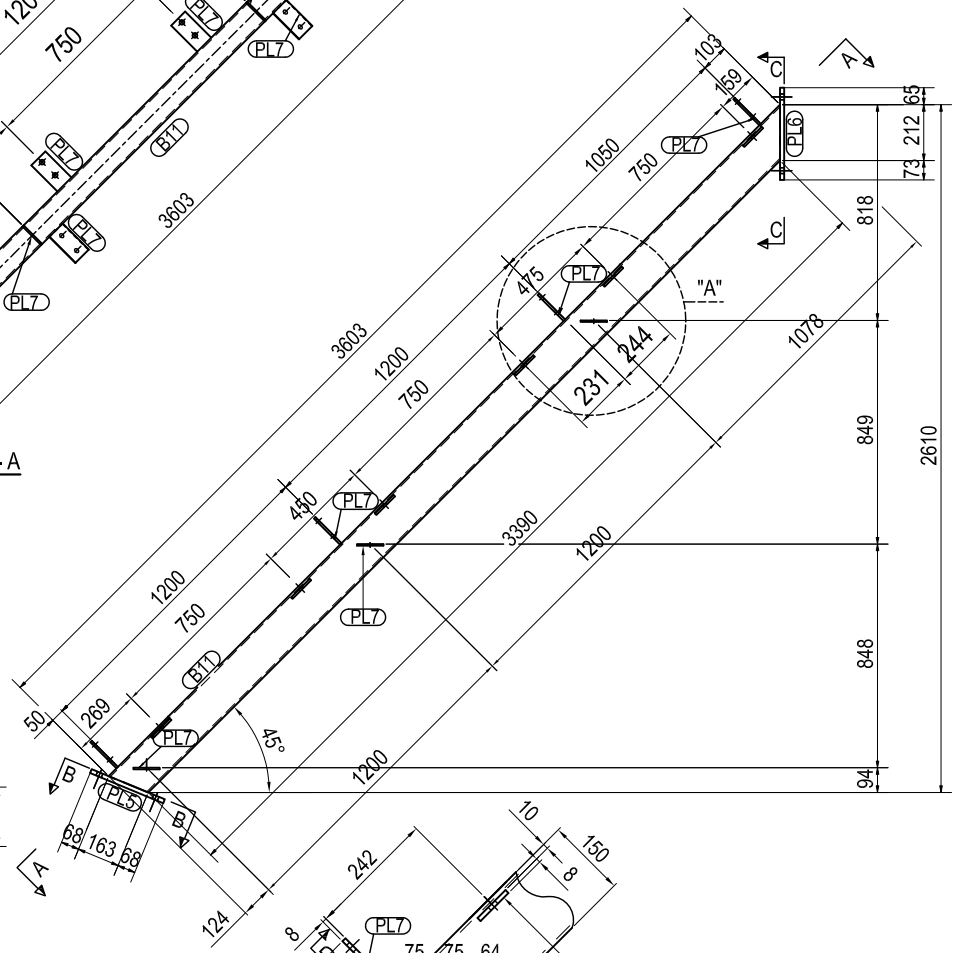

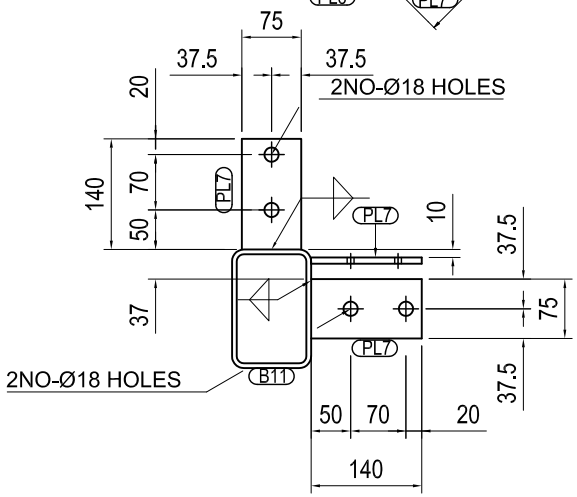

D - D
1 : 3

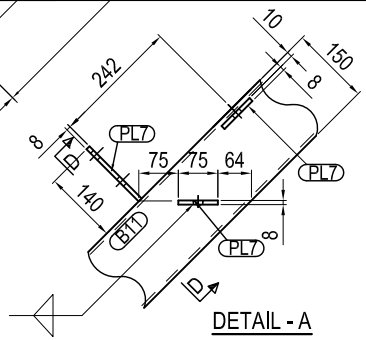

DETAIL - A

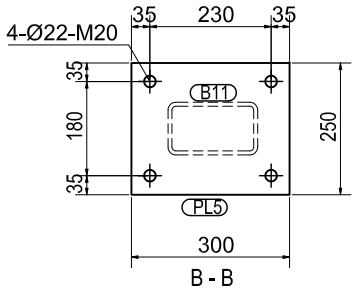

B - B
1 : 2

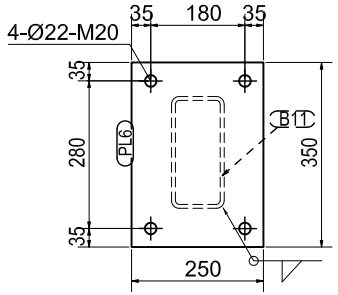

C - C
1 : 2

2 - BEAM[S] REQ'D AS DRAWN MK- TR1

NO.	REV.	DATE	DESCRIPTION
1	1	19-08-2017	MODIFICATION OF ORATION SECTION
0			

CIVILVIC CONSTRUCTION GROUP

PROJECT
BEECHWORTH PICNIC SHELTER

TITLE
ASSEMBLY DETAIL BEAM-TR1

SCALE 1:10 | DWG. NO. 417-7-1-4 | REV. 1