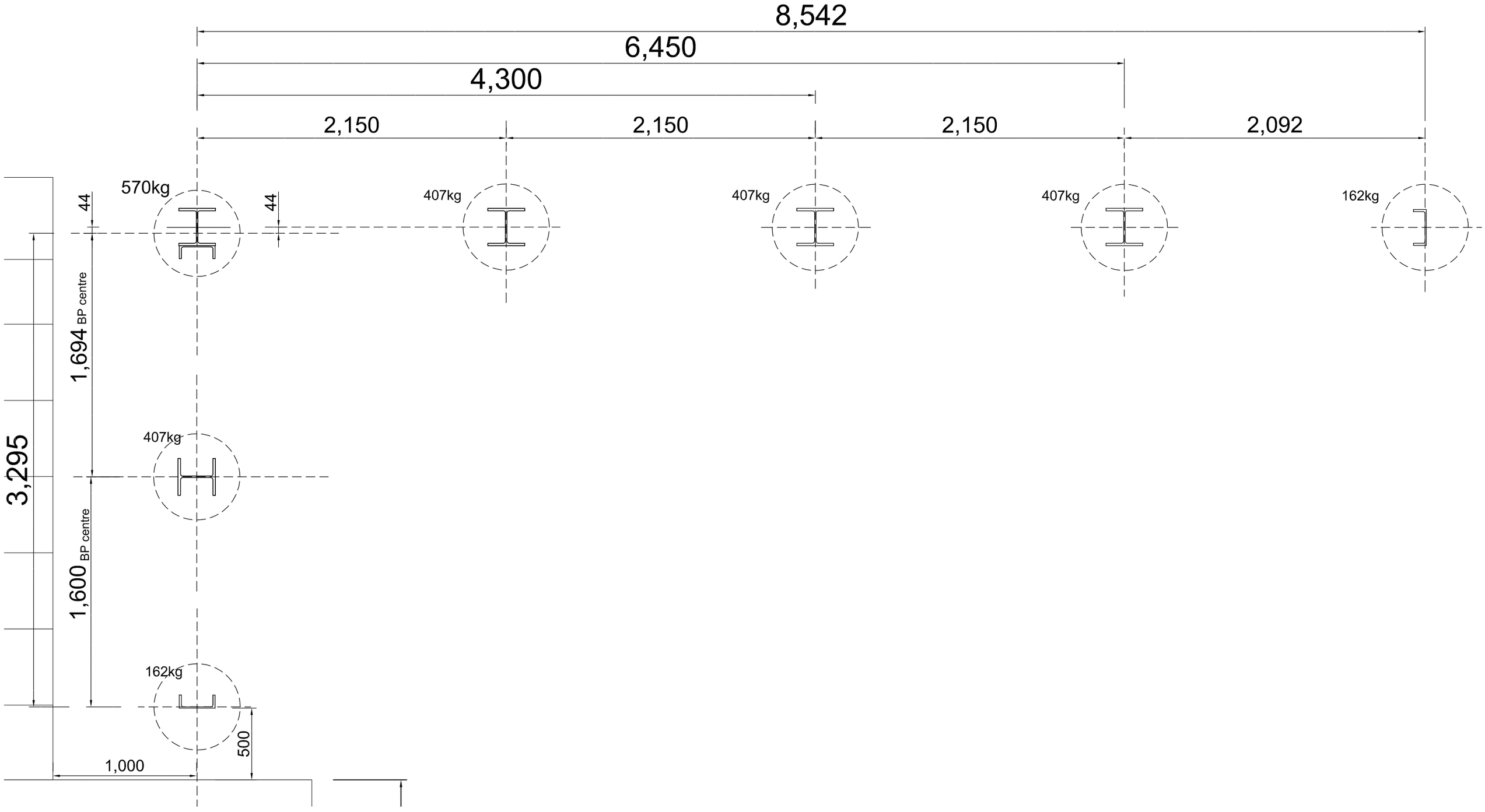
8,542
6,450
4,300
2,150
2,150
2,150
2,092
570kg
407kg
407kg
407kg
162kg
44
44
1,694 BP centre
3,295
407kg
1,600 BP centre
162kg
500
1,000

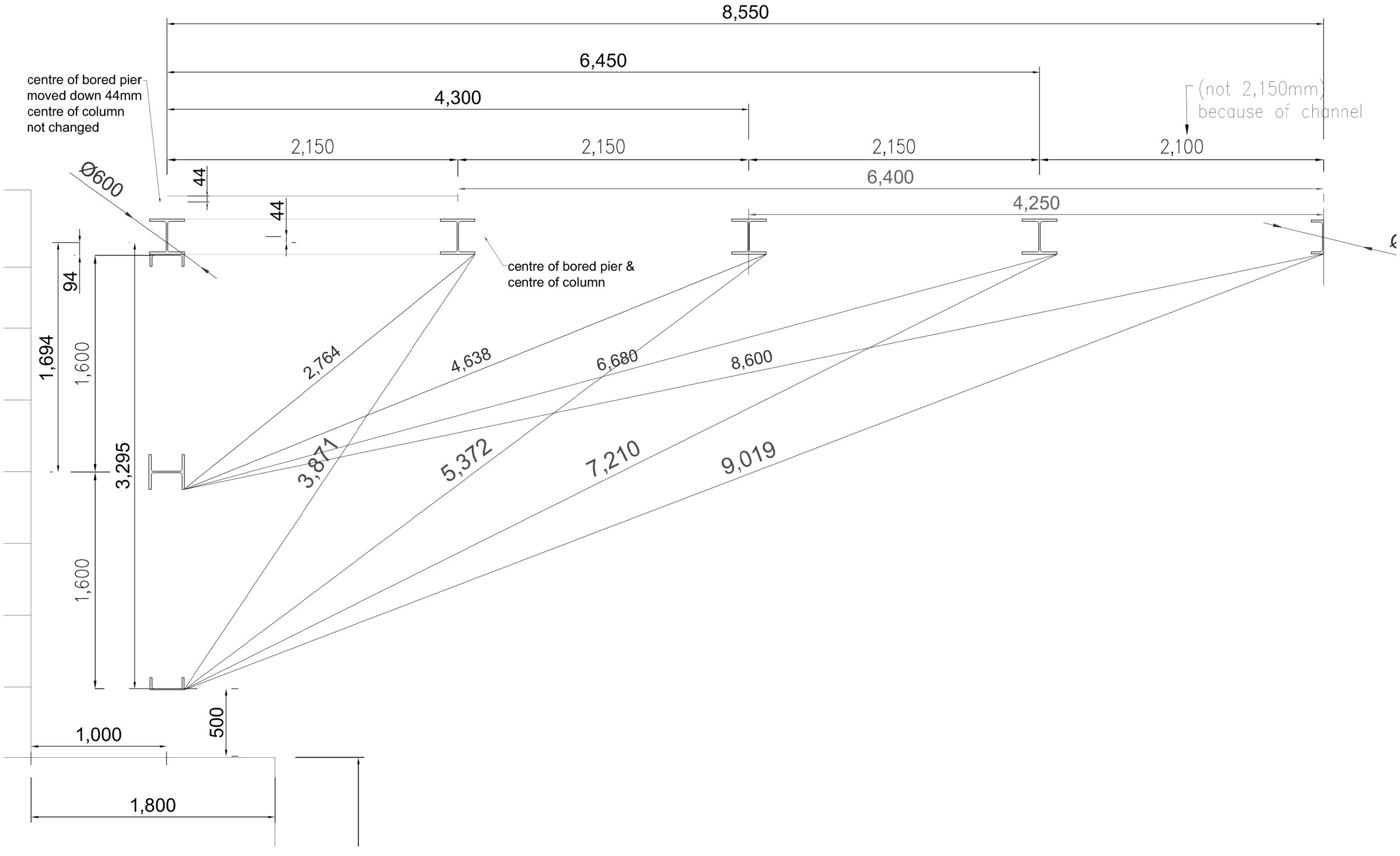
8,550
6,450
4,300
centre of bored pier
moved down 44mm
centre of column
not changed
(not 2,150mm)
because of channel
2,150
2,150
2,150
2,100
Ø600
44
44
6,400
4,250
centre of bored pier &
centre of column
94
1,694
1,600
3,295
1,600
2,764
4,638
6,680
8,600
3,871
5,372
7,210
9,019
500
1,000
1,800

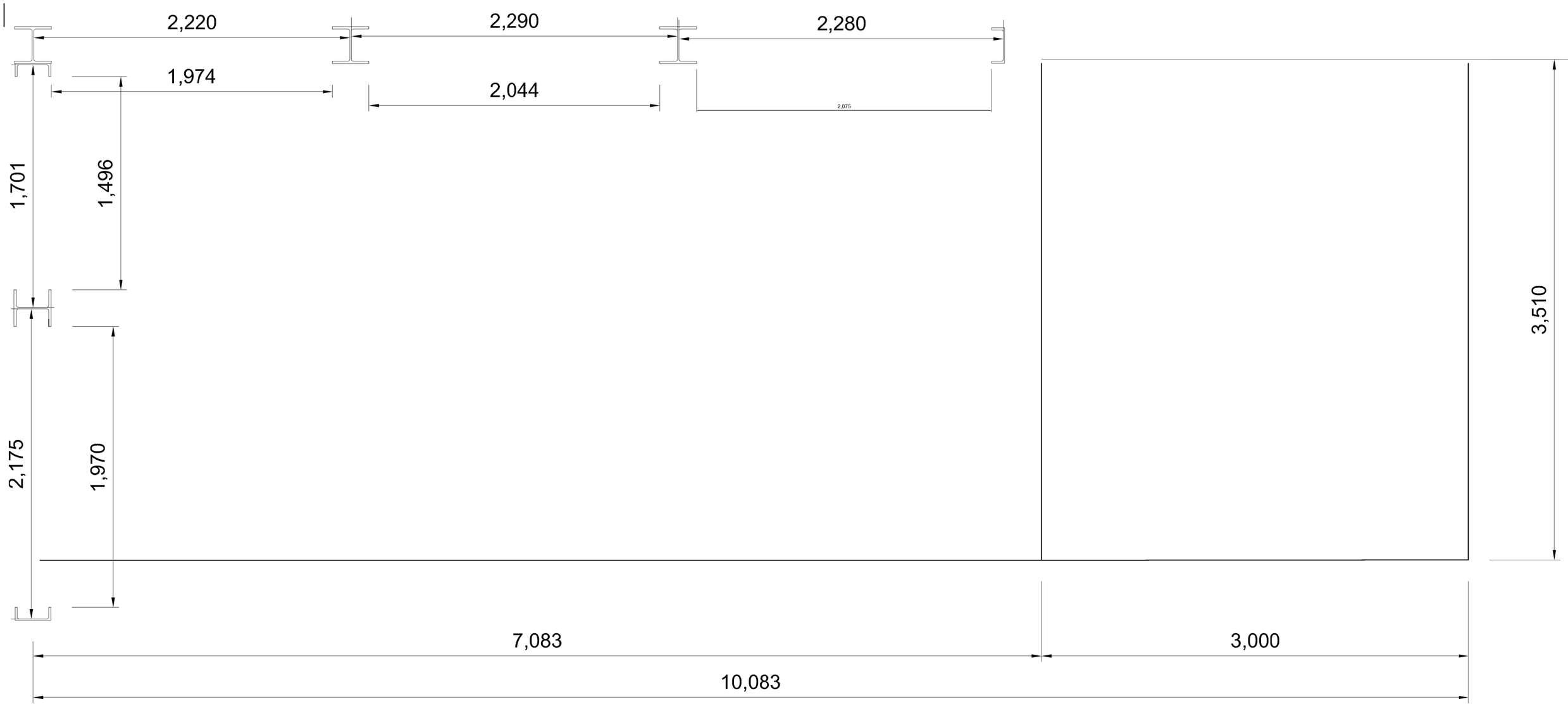
2,220
2,290
2,280
1,974
2,044
2,075
1,701
1,496
3,510
2,175
1,970
7,083
3,000
10,083

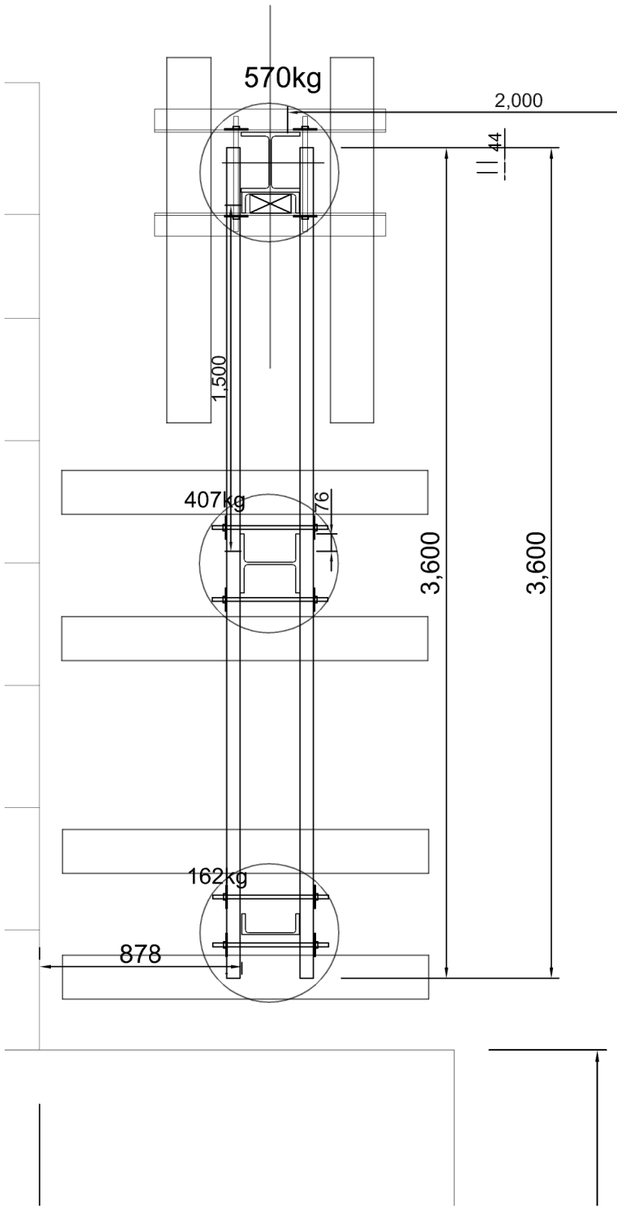
570kg
2,000
407kg
44
53
1,500
190
407kg
76
3,600
3,600
162kg
878

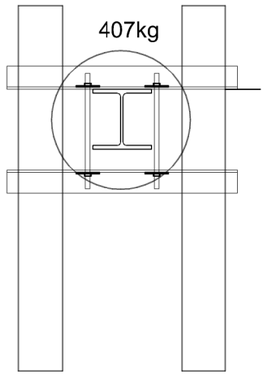
407kg

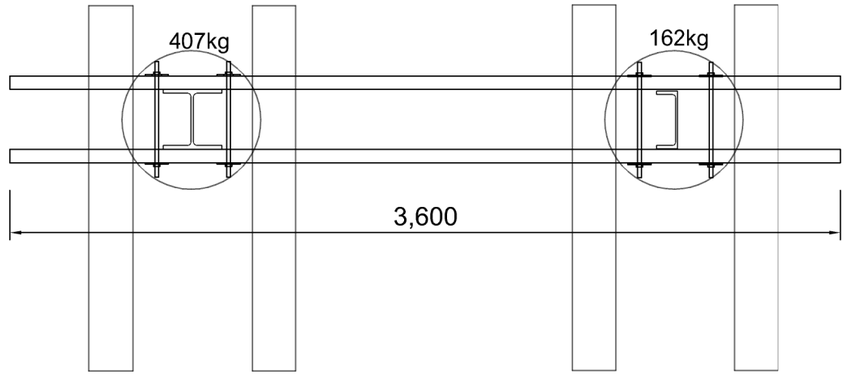
407kg
162kg
3,600

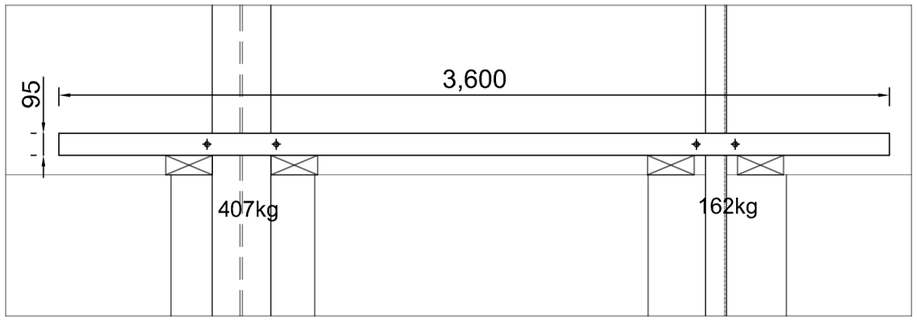
95
3,600
407kg
162kg

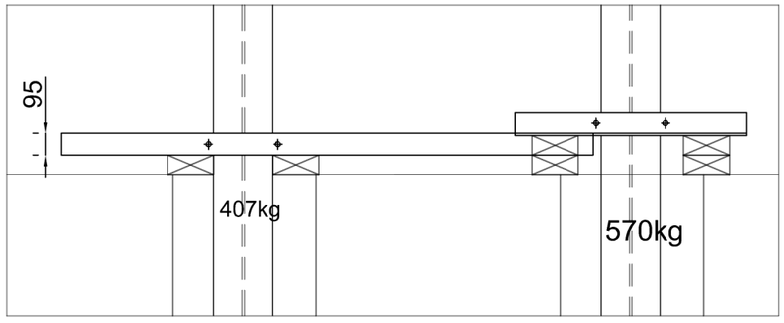
95
407kg
570kg

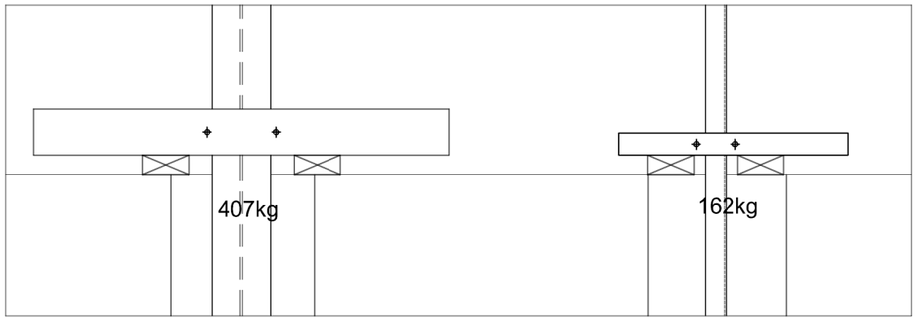
407kg
162kg

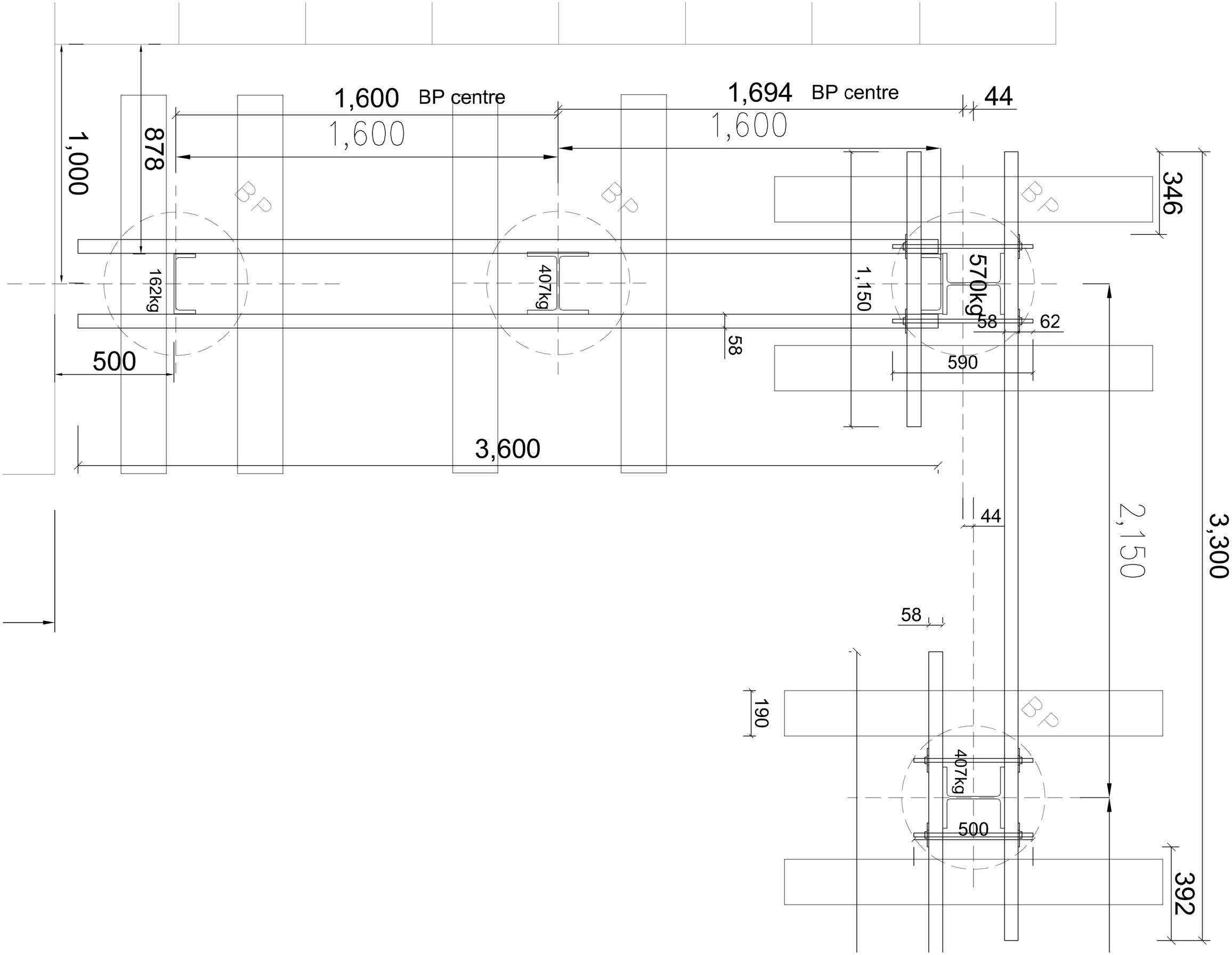

1,600 BP centre
1,600
1,694 BP centre
1,600
44
1,000
878
346
BP
162kg
407kg
1,150
570kg
58
62
58
590
500
3,600
44
2,150
3,300
58
190
407kg
500
392

Mario's
LVL

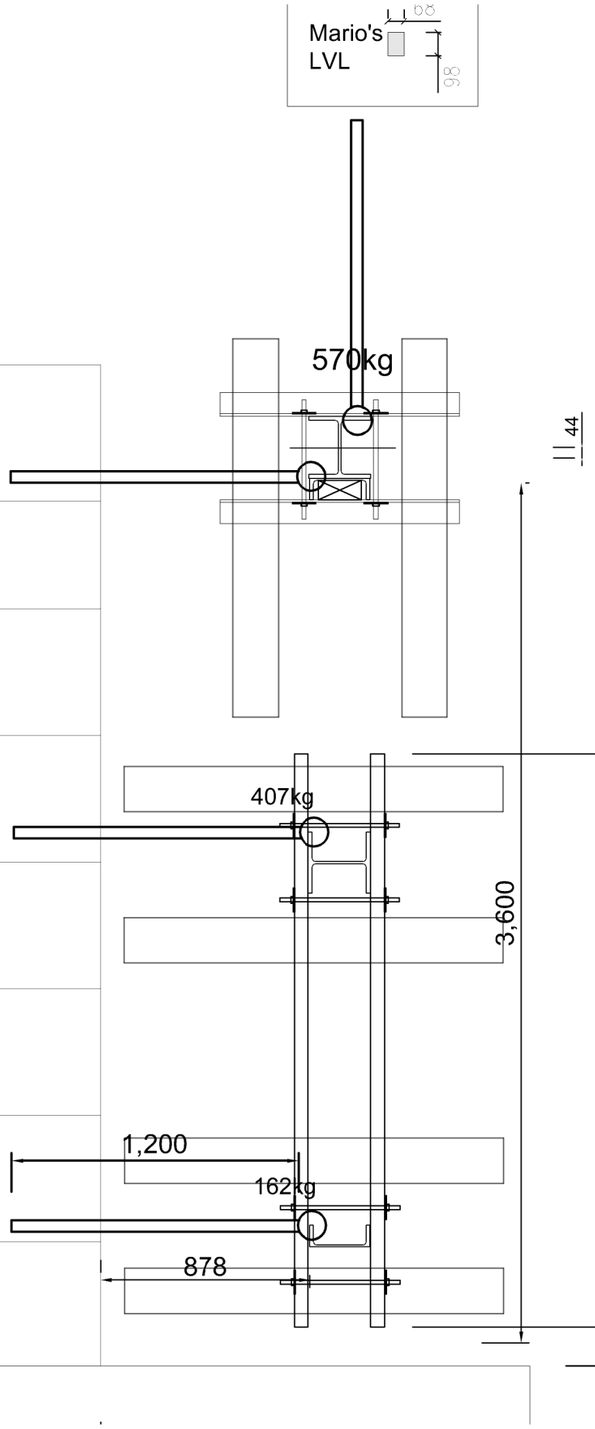
570kg
44
407kg
3,600
2,400
1,200
162kg
878

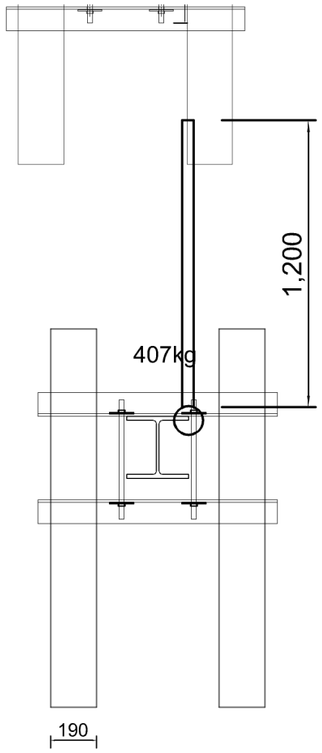
1,200
407kg
190

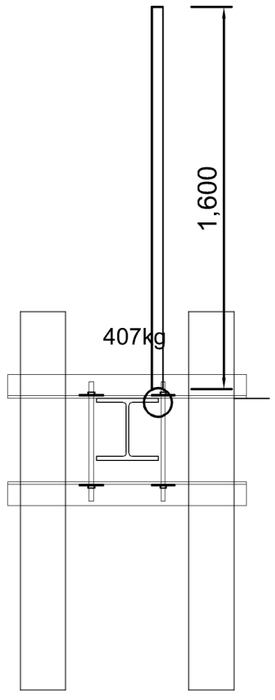
1,600
407kg

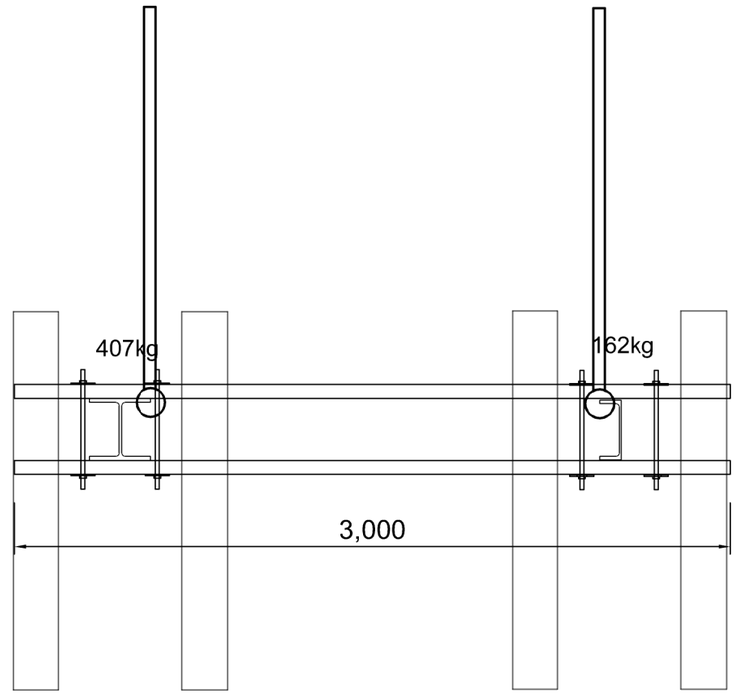
407kg
162kg
3,000